Adam Tas Corridor Energy

Applications of power distribution boxes in Congo

Applications of power distribution boxes in Congo

Three Phase Distribution Box Functions and

A three phase distribution box safely distributes and protects power for large equipment in factories, buildings, and high-demand commercial settings.

RDC : lancement officiel de la "Kim-Box", une innovation du savoir

Fruit du génie congolais, la Kim-Box est conçue pour réguler automatiquement l'électricité dans tout type d'installation, qu'elle soit monophasée, biphasée ou triphasée.

Electrical Distribution Boxes: Types, Uses & Selection

Learn how electrical distribution boxes work, their key components, common types, and how to choose the right enclosure for safe and reliable power distribution.

Understanding Distribution Boxes: A Comprehensive Guide

Learn what a distribution box is, its types, and how to choose the right one for your project.

Includes clear examples and expert tips.

Understanding Distribution Boxes:A Comprehensive Guide

A distribution boxes is an essential device that manages the safe and efficient flow of electrical power throughout different areas of a building or facility.

Maluku Industrial Park, Congo , Cases

Congo-Gilli to Maluku 220kV Transmission Line and Maluku 220kV Substation - Distribution Boxes Langsung Electric was involved in supplying a series of distribution boxes for the 220kV transmission

Industrial Power Supply Solutions for Africa: Intelligent

Facing unstable power grids in Africa? This article explores intelligent multi-power switching systems for factories, featuring a real 5-channel Congo

The High Voltage Line Becomes a Power Distributor: A

Unfortunately, for these villages, the use of classical stations is too expensive to the power distributors because of high cost of investment and

Maluku Industrial Park, Congo , Cases

Our distribution boxes were designed to withstand the harsh climatic conditions typical of the region, ensuring continuous and reliable power distribution. The units were built to integrate seamlessly with

OVERVIEW OF THE ELECTRICITY SECTOR IN THE DEMOCRATIC REPUBLIC OF CONGO

4. ELECTRICITY DEMAND AND SUPPLY SITUATION IN DRC The Democratic Republic of Congo "DRC" is a big country in the heart of Africa with an area of 2,345,000 km2 and nearly 72 million

Congo, Republic of the

Overview The Republic of the Congo's energy sector is ripe for investment. The absence of reliable power grids and adequate electrical distribution has a dampening effect on investment and

Everything You Need to Know About Temporary Power

What are some common applications for temporary power distribution boxes? We'll explain how they work and benefit your business. Learn more here!

What is a Distribution Box? - A Comprehensive Guide

Distribution boxes play a critical role in ensuring safe and efficient power flow across various applications. They protect circuits, manage energy

Power Distribution Boxes: A Complete Overview , Eventech

This article covers the types, features, and advantages of power DB boxes, as well as their manufacturers and frequently asked questions.

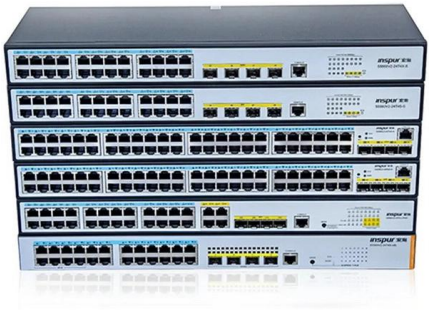

How does a power distribution box work

The distribution box is a very important component of the power system. It is responsible for transmitting electrical energy from the power station

The Importance of Distribution Boxes in Electrical Systems

A distribution box is an exposed or concealed metal box that houses the circuit breakers that regulate the distribution of electricity throughout a

Congo : Power Infrastructure for Rapid Industrial Growth

Modular switchgear systems deployed for Congo's rapid industrial growth, enabling fast, reliable power distribution and scalable electrical infrastructure.

Distribution Boxes: Types and Functions

A distribution boxes acts as the load center and main distributor of electrical power within a building. Also called a distribution board, panel board,

Understanding Distribution Boxes: Your Guide to Power

Understanding the Functionality of Electrical Distribution Box Systems - This article explores the features, safety considerations, and

The Ultimate Guide to Distribution Box Types

In any electrical system, the distribution box is the heart and brain, a critical component that safely manages and distributes power from the main source to

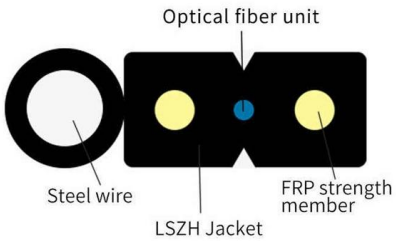

Understanding Distribution Boxes: A Comprehensive Guide

Distribution box What Is a Distribution Box Used For A distribution box is used to receive electrical power from a main supply and distribute it to

People's Republic of the Congo Power Strips

People's Republic of the Congo power strips and PDU power distribution units for surface mount, rack mount and general purpose applications. Multiple outlet power strips are manufactured in

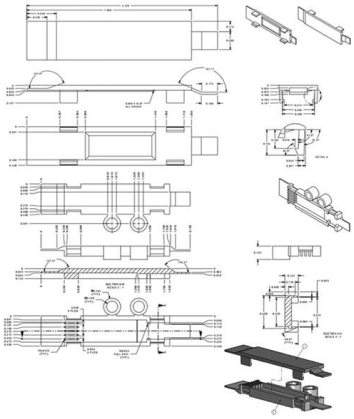

Ultimate Guide To Distribution Boxes Db Boxes Types

This ultimate guide explains what a distribution box does, its internal components, common types, real-world applications, and how to select the right DB Box for

OVERVIEW OF THE ELECTRICITY SECTOR IN THE DEMOCRATIC

The development of hydropotential of Inga is considered as a sustainable solution to the problem of power deficit for many countries in the SADC region and in all the African continent.

Contact Us

For datasheets, pricing, or custom telecom energy solutions, please visit: https://koskolong.co.za