Adam Tas Corridor Energy

Compatible 40G transimpedance amplifier Dutch supplier

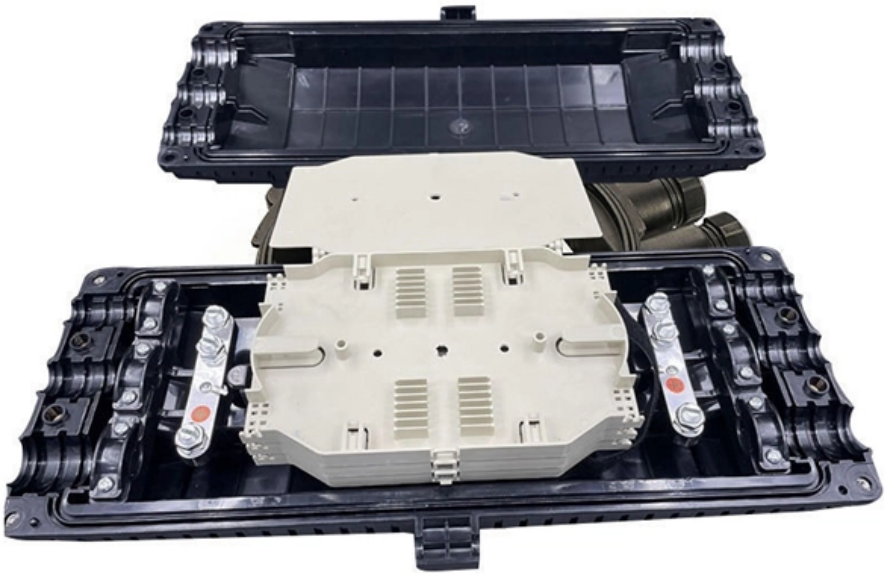

Compatible 40G transimpedance amplifier Dutch supplier

Transimpedance Amplifier

Transimpedance Amplifier,minisilicon The ms48040 is a high-performance four channel TIA that meets the requirements of 8.5Gbps to 28Gbps transmission rate

Transimpedance Amplifiers , Delivering World Class

Marvell's transimpedance amplifier (TIA) portfolio powers PAM4 and Coherent-based pluggable optical modules for high-speed cloud AI connectivity and long-haul

Transimpedance Amplifiers

MACOM's optoelectronics products include a wide range of transimpedance amplifiers (TIA) for line and client side fiber optic receivers up to 1.6 Tbps . Our portfolio includes linear TIAs for coherent and

Transimpedance Amplifiers (TIAs) , Semtech

Semtech offers a broad portfolio of fully integrated BiCMOS and pure CMOS

transimpedance amplifiers (TIAs) providing wideband, low noise pre-amplification

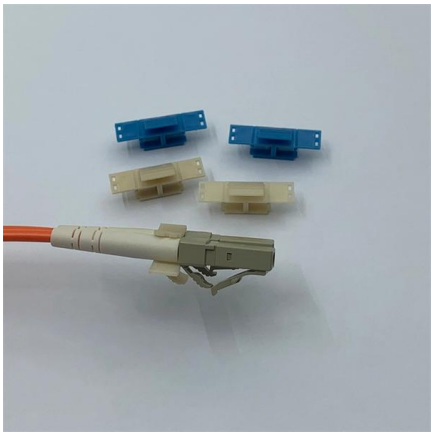

Marvell 64 Gbaud Quad-Channel, Differential Input, Linear

The IN6454TA is a quad-channel, differential linear transimpedance/ variable-gain amplifier (TIA/ VGA) for 400G coherent detection receivers for long haul and metro networks.

Transimpedance Amplifiers target 40G and 100G networks.

"Inphi's ability to address the difficult technical challenges faced by carriers has secured Inphi's position as the leading supplier of 40G transimpedance amplifiers (TIA) and drivers," stated

Transimpedance Amplifiers

Current-to-Voltage Amplifier for use with Photodiode-Based Detectors. Transimpedance Amplifiers, Standalone Devices with Data Acquisition as well as Display Function (Optometer). Log/Lin

Transimpedance amplifiers , TI

Our high-bandwidth transimpedance amplifier (TIA) portfolio includes devices with variable gain settings, fast recovery time, internal input protection and fully differential outputs that are optimized for a wide

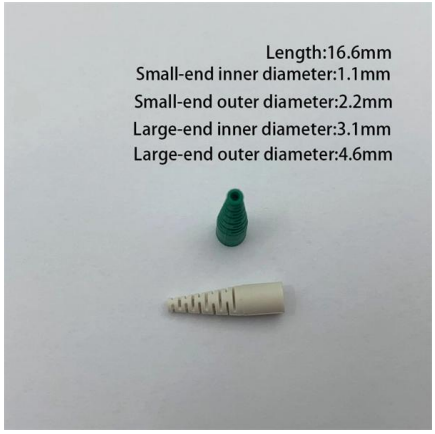

Transimpedance amplifier

Find your transimpedance amplifier easily amongst the 16 products from the leading brands (Gigahertz Optik, Newtons4th, Analog Devices,) on DirectIndustry, the

32-Gb/s NRZ and 40-Gb/s PAM-4 Transimpedance Amplifier

In this article, a wide-bandwidth, fully differential transimpedance amplifier (TIA) is implemented in Taiwan Semiconductor Manufacturing Company 90-nm complementary

25G/40G Limiting InGaAs Optical Receiver 850nm

The DSC-R411 is a high-gain PIN + Transimpedance + Limiting amplifier ideally suited for both singlemode & multimode digital applications up to 43 Gb/s. The

Photodiode Amplifiers - Buying Guide & Supplier List

Photodiode Amplifiers - Buying Guide & Suppliers Use this photodiode amplifiers buying guide to compare major types, define selection criteria, and find suppliers: ?

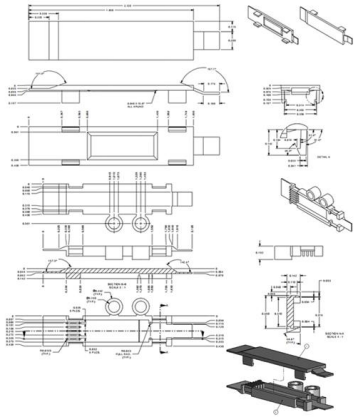

RF Transimpedance Amplifiers

RF Transimpedance Amplifiers The portfolio includes transimpedance amplifiers (TIAs) supporting data rates up to 43 Gb/s for optical fiber communications applications.

New family of transimpedance amplifier for 10G, 40G and 100G optical

GigOptix launched new family of Transimpedance Amplifier (TIA) for 10G, 40G and 100G receiver applications. GigOptix's new TIA family details: GX3101, a high

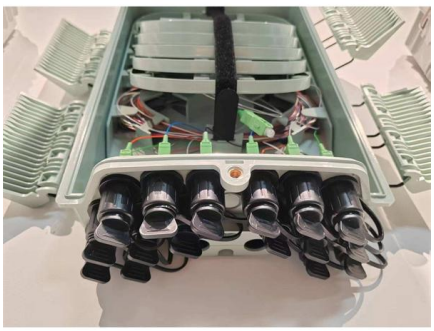

A 40-GHz bandwidth transimpedance amplifier with

The transimpedance gain is equal to 60 dBO and the 3-dB bandwidth is equal to 7 GHz. The power consumption of the proposed TIA is 3.6 mW from a 1.2 V supply voltage.

Transimpedance Amplifiers (TIA) , Analog Devices

Analog Devices' optical and logarithmic transimpedance amplifiers (TIAs) offer high performance, single-chip solutions for precise photodiode current-to-voltage

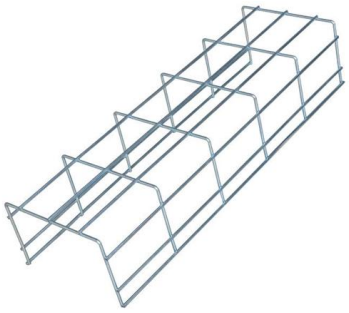

GigOptix introduces linear TIA for 40G coherent receivers

GigOptix Inc. has announced its GX3122 dual-channel linear Transimpedance Amplifier (TIA) designed for use in next-generation 40Gb/s DWDM coherent optical receivers.

Low Noise Transimpedance Amplifiers

Find Low Noise Transimpedance Amplifiers related suppliers, manufacturers, products and specifications on GlobalSpec - a trusted source of Low Noise Transimpedance Amplifiers information.

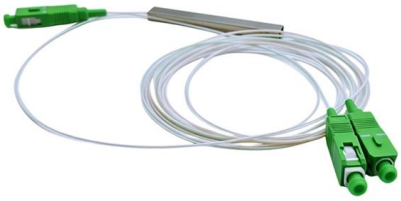

Transimpedance Amplifiers - Mouser Europe

Mouser offers inventory, pricing, & datasheets for Transimpedance Amplifiers.

RF Transimpedance Amplifiers

The portfolio includes transimpedance amplifiers (TIAs) supporting data rates up to 43 Gb/s for optical fiber communications applications. MACOM serves customers with a broad product portfolio that

Transimpedance Amplifiers - Mouser Europe

Transimpedance amplifiers are available at Mouser Electronics from industry leading manufacturers. Mouser is an authorized distributor for transimpedance amplifier manufacturers including Analog

Transimpedance Amplifiers , I To V Converter , RS

A transimpedance amplifier (TIA) is a current to voltage converter which is used to amplify the current output from different types of sensors to a proportional voltage.

Transimpedance Amplifiers Selection Guide: Types, Features

Transimpedance amplifiers (TIAs) are used to convert an input current into an output voltage. Applications Transimpedance amplifiers are useful in many important applications, including:

Transimpedance Amplifier

Find Transimpedance Amplifier related suppliers, manufacturers, products and specifications on GlobalSpec - a trusted source of Transimpedance Amplifier information.

High-Speed Photoreceiver Modules, Fiber Coupled,

Thorlabs' RX Series of High-Speed Receivers combine a photodiode and transimpedance amplifier in a compact hermetic package with a pigtailed fiber input.

Contact Us

For datasheets, pricing, or custom telecom energy solutions, please visit: https://koskolong.co.za