Adam Tas Corridor Energy

Uzbekistan Multi-Parallel Optical Module

Uzbekistan Multi-Parallel Optical Module

Multi-channel parallel optical transceiver module

In many circumstances, it is necessary to design an optical transceiver module with multi-channel and parallel optical designs. Currently, an optical device and a circuit board are separated in the multi

Multi-channel parallel optical receiving device

The optical signals are divided into multi-channel optical signals in parallel. The top surface of an output end of the arrayed waveguide grating is at a predetermined angle, causing the multi-channel optical

Maxsus 40G QSFP+ MODULI

Maxsus 40G QSFP+ Parallel SMF moduli, MPO uzilish marshrutizatsiyasi $ 180.00 Dastlabki narxi: $180.00.$ 78.13 Joriy narx: $78.13. Chegirma!

POET Enters Optical Module Market with 800G Transceiver for

The Wavelight(TM) is an 800G 2xFR4 OSFP module that incorporates the Company's POET

Optical Interposer(TM) technology and related optical engine products. Wavelight is the Company's first POET

Multi-channel optical coupling between VCSEL arrays and multimode

We have successfully developed some new assembly techniques for the prototype ParaBIT module to provide the efficient and uniform multi-channel optical coupling between

Parallel optical computing capable of 100-wavelength multiplexing

Figure 1b demonstrates a multi-wavelength multiplexed photonic computing architecture, systematically integrating three functional modules: (1) microcomb-based parallel vector loading, (2)

Applications for Embedded Optic Modules in Data Communications

Some of the largest data communication systems in the industry already use parallel optic modules for backplane connectivity in their multi-chassis switch fabrics. MicroPOD and MiniPOD modules

1060-nm VCSEL-based parallel-optical modules for optical interconnects

The capability of mounting a parallel-optical module onto a PCB through solder-reflow process contributes to reduce the number of piece parts, simplify its assembly process, and minimize

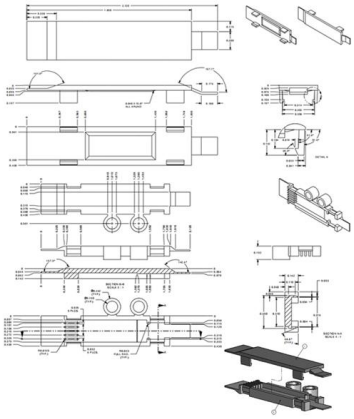

Lider Team -- Distrib`yutor setevogo i

The Company has extensive experience in implementing network and system integration projects of any complexity using equipment from leading

Multi-channel parallel optical communication module and optical

A multi-channel parallel optical communication module includes a casing having an airtight cavity, an optical communication assembly accommodated in the airtight cavity, and a temperature

Catalogue

CUSTOMER CARE: Industrial zone "A", FEZ "Jizzakh", Jizzakh, Uzbekistan Sales Department: Tel: +998-99-1159003 Email: sales@goc-uz.uz

Lider Team -- Distrib`yutor setevogo i

About the Company We provide active and passive telecommunications equipment: fiber optic cable, optical patch cords, switches, media converters, SFP modules,

SC Solar builds Uzbekistan's first automated module production line

SC Solar has provided a turnkey solution for Uzbekistan's first automated PV module production line in the city of Nukus, a high profile project recently visited by the country's president

Parallel Optics and WDM Optics in High-speed Optical Modules

Parallel optical solutions are particularly cost-effective for short- to medium-distance transmissions, whereas WDM solutions are more advantageous for long-distance transmissions as

Optical Transceiver Module Imports in Uzbekistan

Volza's Uzbekistan import data of Optical Transceiver Module is sourced and complied from Global import export shipments across 80+ countries. Our datasets are updated daily, and paid subscribers

Parallel Optical Transceivers & AOC - CablesTEC

CablesTEC's parallel high-speed optical modules use mature optical components and manufacturing processes, and have great low-cost advantages compared

Fiber Optic Connector Buyers & Importers in Uzbekistan

Connect 157 Active Fiber Optic Connector Buyers in Uzbekistan based on import shipments till Mar-25 with details of Contact numbers, Qty, Current Pricing & Suppliers.

Parallel-optical interconnects >100 gb/s

A parallel-optical interconnect with 12 channels operating at 8.5 Gb/s giving an aggregate data rate of 102 Gb/s is demonstrated, to the authors' knowledge, for the first time. The paper describes and

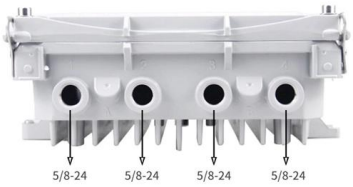

Unlock High-Density 100G Connectivity: Your Guide to the 100G

Enter the 100G PSM4 (Parallel Single-Mode 4-lane) optical module - a crucial workhorse powering efficient 100 Gigabit Ethernet (100GbE) links. This guide dives deep into what makes

POB48 Series Parallel Optical Transceiver Module

The POB48 series parallel optical transceiver module is designed for defense communication command systems and subsystems, enabling bidirectional conversion between multi-channel electrical and

Parallel Optics

The characters are transmitted in a sequence over a single fiber, rather than simultaneously over two or more fibers, as in parallel transmission. A directly modulated 850nm VCSEL has been used to date

GOC-UZ

The degree of localization of optical sable production is more than 40%, and the necessary raw materials are purchased from local manufacturers and suppliers in

Parallel Optic Modules

Designed to operate on multimode fi ber systems at a nominal wavelength of 850 nm, the Par-allel Fiber-Optic Modules feature high-performance, highly reliable, short wavelength optical devices, coupled

VCSEL-based parallel-optical modules for optical interconnects

Several different kinds of VCSEL-based parallel-optical modules have been developed in Furukawa Electric for optical interconnects. As a solution for cost-effective 100-Gb/s applications, a solderable

GLOBAL OPTICAL COMMUNICATION UZBEKISTAN

Zavod No1 proizvodit opticheskij kabel` dlya vnutrennej prokladki, proizvodstvennaya moshhnost` na 6 proizvodstvenny`x ploshhadkax sostavlyaet 120 000 km kabelya v god. Krome togo, v mesyacz

86115D Multi-Port Plug-In Module for High

Dramatically reduce the cost of test with high throughput test configurations Two or four 20 GHz optical ports or two 34 GHz optical ports for high volume or parallel

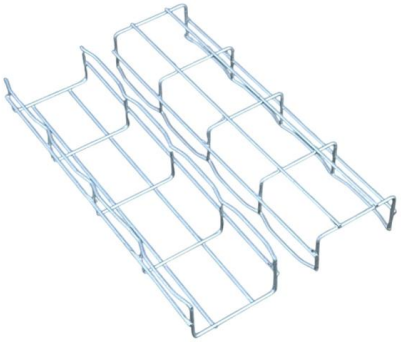

A 36-channel parallel optical interconnect module based on

We describe the packaging and testing of a two-dimensional array parallel-optics module with 36 channels with each channel operating up to 3.3 Gb/s. This represents the first commercial

Parallel Optic Technology

Parallel Optic Technology Parallel optics is a fiber optic technology primarily targeted for high-data, short-reach multimode fiber systems that are typically less than 150 meters. Parallel optics differs

Contact Us

For datasheets, pricing, or custom telecom energy solutions, please visit: https://koskolong.co.za