Adam Tas Corridor Energy

Vietnam Independent Switch 400G

Vietnam Independent Switch 400G

Nintendo Switch OLED model with White Joy-Con Vietnam

Nintendo Switch OLED model with White Joy-Con warranty 12 months. Free shipping Vietnam. New version 7-inch OLED screen.

400Gb Data Center Switches

FS 400G data center switches offer high speeds and port densities to meet the network deployment requirements of various scenarios and the evolving requirements of next-generation data center

EPS Global -- Global Solutions. Local Understanding.

EPS Global -- leading franchised distributor for specialized IT components and semiconductors. 28 locations worldwide.

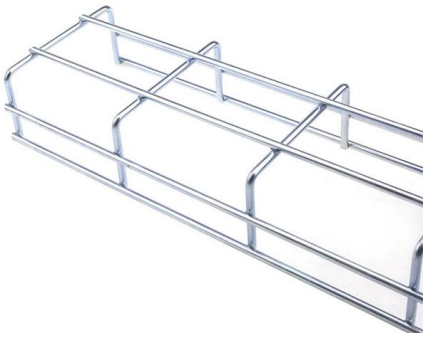

Asterfusion 400g Ethernet Switch: Affordable Net Solution

Asterfusion's 400G network switch stands out in the market with its sleek design concept, unique heat dissipation mechanism, minimal redundant

fans, and on

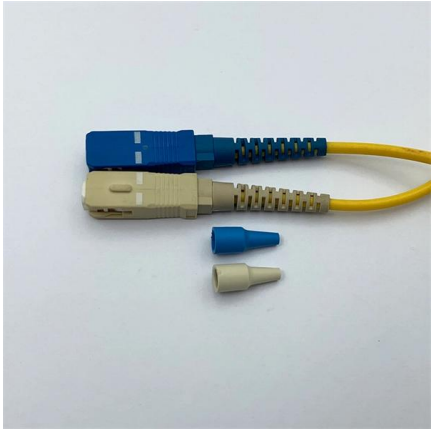

Benelli Imperiale 400 2026 Price In Vietnam

Benelli Imperiale 400 2026 is a new Bike by Benelli, the price of Imperiale 400 2026 in Vietnam is VND 155,250,000, on this page you can find the best and most updated price of Imperiale

New Nexus 400 Gigabit Ethernet (400G) Switches

Cisco unveils new 400 Gigabit Ethernet (400G) switches. Meeting modern data center network challenges demands high scale and high bandwidth.

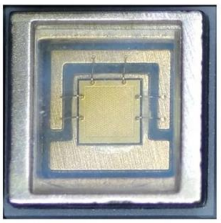

Data Center 400G Switch Q& A

A: Yes, our 400G network switches maintain stable latency performance even under mixed traffic conditions. Q: Does the 400G switch

Asterfusion 400g Ethernet Switch: Affordable Net Solution

Perhaps from white box switch manufacturers? Some of the noteworthy 400G white box switch (400G ethernet switch) manufacturers include : Asterfusion, Accton,

Edge-Core 400G Switches , Spine & Modular Platforms

Find the right Edge-Core 400G Switches & solutions for your organization. We have the expertise to help your organization.

Vina Pho Rice Noodles 400g (Made in Vietnam)

Buy Vina Pho Rice Noodles 400g (Made in Vietnam) online today! Vina Pho Rice Noodles 400g (Made in Vietnam) Vina Rice Noodles are made with fresh

Cisco 400G Data Center Networking

Get a high-performance, power-efficient, and compact switch that keeps up with AI/ML bandwidth needs.

400G Switch Market by Applications: Thailand, Japan, South

Vietnam's 400G switch market is in a nascent but rapidly growing stage, primarily driven by expanding data center infrastructure and rising internet penetration.

Datacenter

As data centers continue to evolve, the demand for higher bandwidth and faster network speeds will drive further advancements in the electronic components used in 400G/800G network switches.

Global 400G Switch Supply, Demand and Key Producers, 2024-2030

Global 400G Switch production by Application production, value, CAGR, 2019-2030, (USD Million) & (K Units). This reports profiles key players in the global 400G Switch market based on the following

Experience the Speed of light with Reliable Transfer Switching

Havells is at the forefront of transforming modern living spaces by offering innovative solutions that elevate everyday experiences. With a deep understanding of consumer needs, the company has

400G data center switch

The S9300 series switch is a high-performance and high-density switch built on the cutting-edge 25.6T chip, with a single port supporting 400G

Vietnam War

The Vietnam War was a prolonged conflict in Southeast Asia, involving North Vietnam and South Vietnam, with significant international involvement.

400G High Speed Switches

In response to the explosive growth of data, the 400G switch aims to meet the network demands of hyperscale data centers and cloud computing service

RXT-6400 400G Test Module

The RXT-6400 is the first truly portable 400G test set supporting native PAM4 QSFP-DD and OSFP. Equipped to support all common transceiver form-factors, this module is a perfect complement to the

Development of Vietnam Smart Grid Roadmap for period up to year

Vietnam has been implementing the current Smart Grid Development Roadmap since 2012, following the Prime Minister's Decision No. 1670/QD-TTg dated 8 November 2012. However,

Global 400G Switch Market 2025 by Manufacturers, Regions, Type

400G Switch market is split by Type and by Application. For the period 2020-2031, the growth among segments provides accurate calculations and forecasts for consumption value by Type, and by

400G Solutions

For the most demanding environments the 400G routing and switching platforms provide flexibility and choice for large scale cloud, leaf and spine, routing

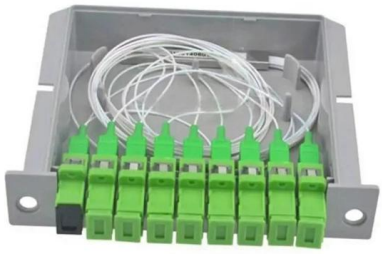

400g Enterprise Switch 32-Port N9K-C9332D-Gx2b Data Center Switch

400g Enterprise Switch 32-Port N9K-C9332D-Gx2b Data Center Switch
US$11,000.00-14,000.00 1 pieces (MOQ) Start Order Request Send Inquiry

Networking Infrastructure > Networking Distributor in Vietnam

SLA Company Limited is a distributor of networking infrastructure products in Vietnam. Router, switch, load balancer, access point, switch, PoE adapter,

Mains electricity by country

This is an overview of mains electricity by country, with a focus on listing the regional differences in plug and socket types, nominal supply voltages, and AC supply

Vietnam

Vietnam is a developing country with a lower-middle-income economy. It has corruption, censorship, environmental issues, and a criticized human rights

GaN switch for 400 V powertrains

GaN switch for 400 V powertrains The InnoSwitch3-AQ's design allows 400 V systems to provide performance and protection features similar to those of 1700

Global 400G Switch Market Research Report 2025

The 400G Switch market size, estimations, and forecasts are provided in terms of output/shipments (K Units) and revenue ($ millions), considering 2024 as the base year, with history

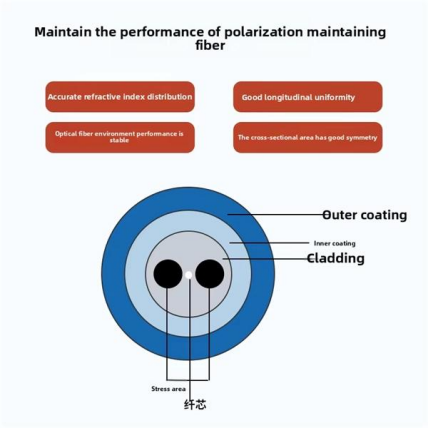

Zeta Fire Alarm Safety Isolator Switch

The Zeta Fire Alarm Safety Isolator Switch 400-210R allows for easy isolation of the fire alarm system, ensuring safety during maintenance or

FS 400G Product Family Introduction

The FS 400G InfiniBand and Ethernet products family, including 400G switches, transceivers, DAC/AOC cables, and network adapters, provides higher

Contact Us

For datasheets, pricing, or custom telecom energy solutions, please visit: https://koskolong.co.za